# BALL VALVE TYPE 21, 21α

- EQUIPPED WITH TOP FLANGE, ALLOWING FOR EASY CHANGE TO AUTOMATIC VALVE.
- COMES WITH BOTTOM STAND TO FACILITATE MOUNTING ON RACKS AND PANELS (See the Ensat mounting procedure on page 69).
- DOUBLE O-RING ON THE STEM IMPROVES DURABILITY AND SEALING PROPERTY.

MANUAL

AUTOMATIC

## BASIC SPECIFICATIONS

**VALVE TYPE** — **BALL VALVE TYPE 21, 21α**
**SIZE** — **15 mm–100 mm (1/2 inch–4 inch)**
**BODY MATERIAL** — U-PVC | C-PVC | PP | PVDF
**SEAL MATERIAL / O-RING** — EPDM | FKM **etc.**
**CONNECTION / FLANGED** — **JIS5K, JIS10K, DIN PN10, ANSI CLASS150**
**SOCKET** — **JIS, DIN, ANSI**
**THREADED** — **Rc, Rp, NPT**
**HIGH PURITY SERIES** — **LUBRICANT FREE**

| | FLUID TEMPERATURE | MAXIMUM WORKING PRESSURE (NORMAL TEMPERATURE MPa{kgf/cm²}) | CONNECTION METHOD | | |
|---|---|---|---|---|---|
| | | | FLANGED | SOCKET | THREADED |
| U-PVC | 0℃ ~ 50℃ | 1.0 {10.2} | ○ | ○ | ○ |
| C-PVC | 0℃ ~ 90℃ | 1.0 {10.2} | ○ | ○ | ○ |
| PP | -20℃ ~ 80℃ | 1.0 {10.2} | ○ | ○ | ○ |
| PVDF | -20℃ ~ 100℃ | 1.0 {10.2} | ○ | ○ | ○ |

NOTE (1) The ball-type valves have dead spaces for structural reasons. Note that volatile liquids, such as hydrogen peroxide ($H_2O_2$) and sodium hypochlorite (NaClO), vaporize in those dead spaces, which may cause abnormal pressure increase in the valve. (When the internal pressure abnormally increases due to vaporization, the gas will be compressive fluid. If the valve breaks in this state, it will be very dangerous, causing explosion and scattering of fragments.) (2) The maximum working pressure is the value including the water hammer pressure. Be careful that the maximum working pressure is not exceeded during use.

* Concerning the allowable pressure for each temperature and material, see the technical documents at the end of this catalog.

■ **Multi Functional Handle**
Removing the handle and placing the raised lugs into the carrier allow for easy disassembly of the valve.
* The handle has other colors. (blue, white, yellow)(Option)

## PARTS LIST MANUAL

FLANGED

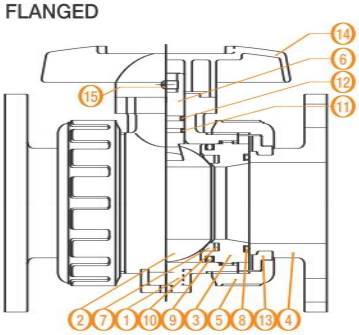


(DETAILS OF STEM)

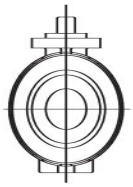

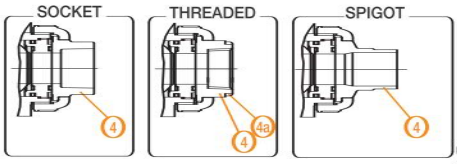

(DETAILS OF ENSAT FITTING MOUNTING HOLE)

| PART NO. / NAME | QTY | MATERIAL |
|---|---|---|
| 1 BODY | 1 | U-PVC, C-PVC, PP, PVDF |
| 2 BALL | 1 | U-PVC, C-PVC, PP, PVDF |
| 3 UNION | 1 | U-PVC, C-PVC, PP, PVDF |
| 4 END CONNECTOR | 2 | U-PVC, C-PVC, PP, PVDF |
| 4a RING | 2 | SUS304 (Made of C-PVC. Used for threaded type of 15 to 25 mm.) |
| 5 UNION NUT | 2 | U-PVC, C-PVC, PP, PVDF |

| PART NO. / NAME | QTY | MATERIAL |
|---|---|---|
| 6 STEM | 1 | U-PVC, C-PVC, PP, PVDF |
| 7 SEAT | 2 | PTFE |
| 8 O-RING (A) | 2 | EPDM, FKM, etc. |
| 9 O-RING (B) | 1 | EPDM, FKM, etc. |
| 10 O-RING (C) | 2 | EPDM, FKM, etc. |
| 11 O-RING (D) | 1 | EPDM, FKM, etc. |

| PART NO. / NAME | QTY | MATERIAL |
|---|---|---|
| 12 O-RING (E) | 1 | EPDM, FKM, etc. |
| 13 STOP RING | 2 | PVDF (Used for flanged type.) |
| 14 HANDLE | 1 | ABS |
| 15 TAPPING SCREW (A) | 1 | SUS304 |

## COMPATIBLE ACTUATOR AUTOMATIC

PNEUMATIC TYPE TA — For detailed specifications, see P.124

PNEUMATIC TYPE AA — For detailed specifications, see P.123

ELECTRIC TYPE T — For detailed specifications, see P.139

## TYPE CATEGORY MANUAL AUTOMATIC

The types are classified according to the size and material.

| SIZE \ BODY MATERIAL | U-PVC | C-PVC | PP | PVDF |
|---|---|---|---|---|
| 15mm – 50mm | TYPE 21α | | TYPE 21 | |
| 65mm – 100mm | TYPE 21 | | | |

**PRODUCT MODEL CODE LIST — MANUAL**

| ACTUATION | TYPE | OPERATING SYSTEM | BODY MATERIAL | SEAL MATERIAL | CONNECTION | STANDARD | SIZE | HIGH PURITY SERIES |
|---|---|---|---|---|---|---|---|---|
| V | ** | LV | * | * | * | * | *** | 1 |
| V MANUAL VALVE | 21 TYPE 21<br>2A TYPE 21α | LV LEVER TYPE | U U-PVC<br>C C-PVC<br>P PP<br>F PVDF | E EPDM<br>V FKM | S SOCKET<br>N THREADED<br>P SPIGOT<br>F FLANGED | J JIS<br>D DIN<br>A ANSI<br>1 JIS10K<br>5 5K | 015 15mm<br>~<br>100 100mm | 1 LUBRICANT FREE |

**PRODUCT MODEL CODE LIST — AUTOMATIC**

| ACTUATION | TYPE | ACTUATOR TYPE | ACTION / POWER SOURCE | BODY MATERIAL | SEAL MATERIAL | CONNECTION | STANDARD | SIZE | SPACE HEATER | HIGH PURITY SERIES |
|---|---|---|---|---|---|---|---|---|---|---|
| A | ** | * | * | * | * | * | * | *** | OC※ | 1 |
| A AUTO-MATIC VALVE | 21 TYPE 21<br>2A TYPE 21α | PNEUMATIC<br>K TYPE TA<br>A TYPE AA<br>ELECTRIC<br>T TYPE T | PNEUMATIC<br>F DOUBLE ACTING<br>G AIR TO OPEN<br>S AIR TO CLOSE<br>ELECTRIC<br>1 Single-Phase 100V<br>2 Single-Phase 200V | U U-PVC<br>C C-PVC<br>P PP<br>F PVDF | E EPDM<br>V FKM | S SOCKET<br>N THREADED<br>P SPIGOT<br>F FLANGED | J JIS<br>D DIN<br>A ANSI<br>1 JIS10K<br>5 JIS5K | 015 15mm<br>~<br>100 100mm | OC 0C<br>* Indicate only for electric type only. | 1 LUBRICANT FREE |

NOTE (1) PP and PVDF socket types are weld type. Note, however, that JIS PP 32-mm socket type is not produced.
(2) PVDF socket type compatible with the JIS standard is not available.
(3) A handle set with a lock mechanism (for malfunction prevention) is available as an option.

## Compatibility of face-to-face dimensions

Both valve face-to-face dimensions and body face-to-face dimensions are compatible between type 21α and conventional type 21. Also, a change to type 21α is available using the end connector and union nut for the existing piping (type 21).

## Compatibility of parts

Some of the body component parts are not compatible between type 21α and type 21. Be careful when parts are changed on site. For details of parts compatibility, contact our sales office in your area.

## Identification of product

[Difference between products] (See Fig. 1.) The body appearance of type 21α is different from that of type 21 to discriminate between them.

## Related materials

Due to the modification and release of type 21α, some parts of related materials, such as outline drawing, instruction manual, and set parts list, have been revised.
Please obtain the latest version at our sales office in your area.

## Performance and options

There is no change in the performance (relationship between the working pressure and temperature, Cv value, chemical resistance, etc.) and options between type 21 and 21α.

Fig. 1: Difference between products

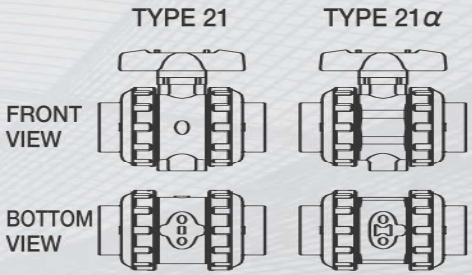

MANUAL

# BALL VALVE TYPE 21, 21α

TYPE——V21LV, V2ALV

CONNECTION / FLANGED, SOCKET, THREADED——JIS, DIN, ANSI SPIGOT——DIN

FLANGED

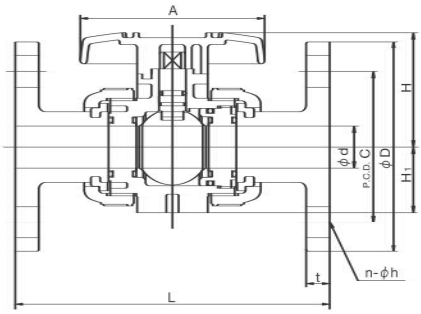


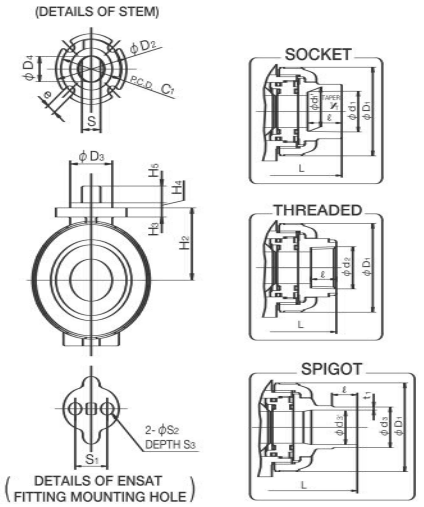


■ JIS, DIN (Unit: mm)

| mm | d | d' | $D_1$ | $D_2$ | $D_3$ | $D_4$ | $C_1$ | H | $H_1$ | $H_2$ | $H_3$ | $H_4$ | $H_5$ | A | S | $S_1$ | $S_2$ | $S_3$ | e |
|---|---|---|---|---|---|---|---|---|---|---|---|---|---|---|---|---|---|---|---|
| 10 | 13 | - | 46 | - | - | - | - | 43.5 | - | - | - | - | - | 80 | - | - | - | - | - |
| 15 | 15 | - | 48 | 42 | 25 | 13.5 | 36 | 51.5 | 29 | 30 | 6 | 3 | 8 | 92 | 10.5 | 19 | 7.3 | 11 | 5.5 |
| 20 | 20 | - | 60 | 42 | 25 | 15 | 36 | 59.5 | 35 | 36.5 | 6 | 3 | 10 | 100 | 11 | 19 | 7.3 | 11 | 5.5 |
| 25 | 25 | - | 70 | 42 | 25 | 15 | 36 | 68 | 39 | 43.5 | 6 | 3 | 10 | 110 | 11 | 19 | 7.3 | 11 | 5.5 |
| 32 | 32 | - | 82 | 48 | 30 | 19 | 42 | 80.5 | 47 | 52.5 | 8 | 3 | 10 | 121 | 15 | 30 | 9 | 15 | 5.5 |
| 40 | 40 | - | 100 | 57 | 35 | 23 | 50 | 89 | 55 | 61 | 10 | 3 | 12 | 131 | 18 | 30 | 9 | 15 | 6.5 |
| 50 | 51 | - | 126 | 57 | 35 | 23 | 50 | 102.5 | 66 | 72.5 | 10 | 3 | 12 | 159 | 18 | 30 | 9 | 15 | 6.5 |
| 65 | 65 | 58 | 133 | 81 | 55 | 30 | 70 | 126 | 72 | 85 | 13 | 3 | 16 | 200 | 24 | 48 | 9 | 6 | 9 |
| 80 | 78 | 68.5 | 152 | 81 | 55 | 30 | 70 | 140 | 85 | 94 | 13 | 3 | 19 | 240 | 24 | 55 | 11 | 7 | 9 |
| 100 | 100 | 90 | 210 | 116 | 70 | 40 | 102 | 178 | 110 | 126 | 16 | 3 | 23 | 300 | 34 | 65 | 11 | 8 | 11 |

**JIS**

| mm | FLANGED JIS5K D | C | n | h | JIS10K D | C | n | h | L U-PVC C-PVC | L PP | L PVDF | t | SOCKET U-PVC, C-PVC $d_1$ | ℓ | 1/T | L | PP $d_1$ | $d_1'$ | ℓ | L | THREADED $d_2$ | ℓ | L U-PVC C-PVC | L PP | L PVDF |
|---|---|---|---|---|---|---|---|---|---|---|---|---|---|---|---|---|---|---|---|---|---|---|---|---|---|
| 15 | 80 | 60 | 4 | 12 | 95 | 70 | 4 | 15 | 143 | 143 | 143 | 12 | 22.11 | 20 | 1/34 | 109 | 21.2 | 20.2 | 20 | 108 | Rc1/2 | 15 | 102 | 100 | 100 |
| 20 | 85 | 65 | 4 | 12 | 100 | 75 | 4 | 15 | 172 | 172 | 172 | 14 | 26.13 | 24 | 1/34 | 128 | 26.2 | 25.2 | 23 | 126 | Rc3/4 | 17 | 120 | 119 | 119 |
| 25 | 95 | 75 | 4 | 12 | 125 | 90 | 4 | 19 | 187 | 187 | 187 | 14 | 32.16 | 27 | 1/34 | 145 | 33.0 | 32.0 | 25 | 141 | Rc1 | 20 | 131 | 130 | 130 |
| 32 | 115 | 90 | 4 | 15 | 135 | 100 | 4 | 19 | 190 | 190 | 190 | 16 | 38.19 | 30 | 1/34 | 162 | - | - | - | - | Rc1 1/4 | 22 | 150 | 146 | 146 |
| 40 | 120 | 95 | 4 | 15 | 140 | 105 | 4 | 19 | 212 | 212 | 212 | 16 | 48.21 | 37 | 1/37 | 189 | 47.0 | 46.0 | 28 | 171 | Rc1 1/2 | 25 | 163 | 160 | 160 |
| 50 | 130 | 105 | 4 | 15 | 155 | 120 | 4 | 19 | 234 | 234 | 234 | 16 | 60.25 | 42 | 1/37 | 220 | 59.0 | 58.0 | 28 | 192 | Rc2 | 28 | 197 | 194 | 194 |
| 65 | 155 | 130 | 4 | 15 | 175 | 140 | 4 | 19 | 261 | 257 | 256 | 18 | 76.60 | 61 | 1/48 | 273 | 75.0 | 73.0 | 35 | 219 | Rc2 1/2 | 32 | 215 | 213 | 212 |
| 80 | 180 | 145 | 4 | 19 | 185 | 150 | 8 | 19 | 306 | 305 | 302 | 18 | 89.60 | 64 | 1/49 | 316 | 88.0 | 86.0 | 35 | 257 | Rc3 | 35 | 265 | 264 | 261 |
| 100 | 200 | 165 | 8 | 19 | 210 | 175 | 8 | 19 | 374 | 374 | 369 | 18 | 114.70 | 84 | 1/56 | 419 | 113.0 | 111.0 | 45 | 341 | Rc4 | 45 | 362 | 362 | 357 |

**DIN**

| mm | FLANGED DIN PN10/PN16 D | C | n | h | L U-PVC C-PVC | L PP | L PVDF | t | SOCKET U-PVC, C-PVC $d_1$ | ℓ | L | PP, PVDF $d_1$ | $d_1'$ | ℓ | L PP | L PVDF | THREADED $d_2$ | ℓ | L U-PVC C-PVC | L PP | L PVDF | SPIGOT U-PVC $d_3$ | $d_3'$ | ℓ | PP, PVDF $d_3$ | ℓ | t PP | t PVDF | L PP | L PVDF |
|---|---|---|---|---|---|---|---|---|---|---|---|---|---|---|---|---|---|---|---|---|---|---|---|---|---|---|---|---|---|---|---|
| 10 | 90 | 60 | 4 | 14 | 120 | 119 | 119 | 12 | 16 | 14 | 99 | 15.5 | 15.4 | 13 | 96 | 96 | Rp3/8 | 15 | 99 | 98 | 98 | 16 | 13 | 16 | - | - | - | - | 114 | 114 |
| 15 | 95 | 65 | 4 | 14 | 130 | 130 | 130 | 12 | 20 | 16 | 102 | 19.5 | 19.3 | 14.5 | 99 | 99 | Rp1/2 | 15 | 102 | 100 | 100 | 20 | 15 | 18.5 | 20 | 18.5 | 2.5 | 1.9 | 124 | 124 |
| 20 | 105 | 75 | 4 | 14 | 150 | 150 | 150 | 14 | 25 | 19 | 119 | 24.5 | 24.3 | 16 | 113 | 113 | Rp3/4 | 17 | 120 | 119 | 119 | 25 | 20 | 24 | 25 | 22 | 2.7 | 1.9 | 144 | 144 |
| 25 | 115 | 85 | 4 | 14 | 160 | 160 | 160 | 14 | 32 | 22 | 131 | 31.5 | 31.3 | 18 | 123 | 123 | Rp1 | 20 | 131 | 130 | 130 | 32 | 25 | 24.5 | 32 | 22.5 | 3.0 | 2.4 | 154 | 154 |
| 32 | 140 | 100 | 4 | 18 | 180 | 180 | 180 | 16 | 40 | 26 | 150 | 39.45 | 39.2 | 20.5 | 139 | 139 | Rp1 1/4 | 22 | 150 | 146 | 146 | 40 | 31 | 28 | 40 | 26 | 3.7 | 2.4 | 174 | 174 |
| 40 | 150 | 110 | 4 | 18 | 200 | 200 | 200 | 16 | 50 | 31 | 164 | 49.45 | 49.2 | 23.5 | 149 | 149 | Rp1 1/2 | 25 | 163 | 160 | 160 | 50 | 40 | 34 | 50 | 32 | 4.6 | 3.0 | 194 | 194 |
| 50 | 165 | 125 | 4 | 18 | 230 | 230 | 230 | 16 | 63 | 38 | 197 | 62.5 | 62.1 | 27.5 | 176 | 176 | Rp2 | 28 | 197 | 194 | 194 | 63 | 51 | 38 | 63 | 36 | 5.8 | 3.0 | 224 | 224 |
| 65 | 185 | 145 | 4 | 18 | 290 | 288 | 287 | 18 | 75 | 44 | 233 | 74.25 | 73.95 | 31 | 205 | 204 | Rp2 1/2 | 32 | 215 | 213 | 212 | 75 | 65 | 44 | 75 | 38 | 6.9 | 3.6 | 245 | 244 |
| 80 | 200 | 160 | 8 | 18 | 312 | 311 | 308 | 21 | 90 | 51 | 284 | 89.2 | 88.85 | 35.5 | 252 | 249 | Rp3 | 35 | 265 | 264 | 261 | 90 | 80 | 51 | 90 | 38 | 8.2 | 4.3 | 296 | 293 |
| 100 | 220 | 180 | 8 | 18 | 352 | 352 | 347 | 18 | 110 | 61 | 351 | 109.05 | 108.65 | 41.5 | 312 | 307 | Rp4 | 45 | 340 | 340 | 335 | 110 | 93.6 | 46 | 110 | 44.5 | 10.0 | 5.3 | 355 | 350 |

■ ANSI (Unit: inch)

| inch | mm | d | d' | $D_1$ | $D_2$ | $D_3$ | $D_4$ | $C_1$ | H | $H_1$ | $H_2$ | $H_3$ | $H_4$ | $H_5$ | A | S | $S_1$ | $S_2$ | $S_3$ | e |
|---|---|---|---|---|---|---|---|---|---|---|---|---|---|---|---|---|---|---|---|---|
| 1/2 | 15 | 0.59 | - | 1.89 | 1.65 | 0.98 | 0.53 | 1.42 | 2.03 | 1.14 | 1.18 | 0.24 | 0.12 | 0.31 | 3.62 | 0.41 | 0.75 | 0.29 | 0.43 | 0.22 |
| 3/4 | 20 | 0.79 | - | 2.36 | 1.65 | 0.98 | 0.59 | 1.42 | 2.34 | 1.38 | 1.44 | 0.24 | 0.12 | 0.39 | 3.94 | 0.43 | 0.75 | 0.29 | 0.43 | 0.22 |
| 1 | 25 | 0.98 | - | 2.76 | 1.65 | 0.98 | 0.59 | 1.42 | 2.68 | 1.54 | 1.71 | 0.24 | 0.12 | 0.39 | 4.33 | 0.43 | 0.75 | 0.29 | 0.43 | 0.22 |
| 1 1/4 | 32 | 1.26 | - | 3.23 | 1.89 | 1.18 | 0.75 | 1.65 | 3.17 | 1.85 | 2.07 | 0.31 | 0.12 | 0.39 | 4.76 | 0.59 | 1.18 | 0.35 | 0.59 | 0.22 |
| 1 1/2 | 40 | 1.57 | - | 3.94 | 2.24 | 1.38 | 0.91 | 1.97 | 3.50 | 2.17 | 2.40 | 0.39 | 0.12 | 0.47 | 5.16 | 0.71 | 1.18 | 0.35 | 0.59 | 0.26 |
| 2 | 50 | 2.01 | - | 4.96 | 2.24 | 1.38 | 0.91 | 1.97 | 4.04 | 2.60 | 2.85 | 0.39 | 0.12 | 0.47 | 6.26 | 0.71 | 1.18 | 0.35 | 0.59 | 0.26 |
| 2 1/2 | 65 | 2.56 | 2.28 | 5.24 | 3.19 | 2.17 | 1.18 | 2.76 | 4.96 | 2.83 | 3.35 | 0.51 | 0.12 | 0.63 | 7.87 | 0.94 | 1.89 | 0.35 | 0.24 | 0.35 |
| 3 | 80 | 3.07 | 2.70 | 5.98 | 3.19 | 2.17 | 1.18 | 2.76 | 5.51 | 3.35 | 3.70 | 0.51 | 0.12 | 0.75 | 9.45 | 0.94 | 2.17 | 0.43 | 0.28 | 0.35 |
| 4 | 100 | 3.94 | 3.54 | 8.27 | 4.57 | 2.76 | 1.57 | 4.02 | 7.01 | 4.33 | 4.96 | 0.63 | 0.12 | 0.91 | 11.81 | 1.34 | 2.56 | 0.43 | 0.31 | 0.43 |

**ANSI**

| inch | mm | FLANGED ANSI CLASS 150 D | C | n | h | L U-PVC C-PVC | L PP | L PVDF | t | $H_1$ | SOCKET U-PVC, C-PVC ASTM SCH40 $d_1$ | $d_1'$ | ℓ | L | ASTM SCH80 $d_1$ | $d_1'$ | ℓ | L | PP, PVDF $d_1$ | ℓ | L PP | L PVDF | THREADED $d_2$ | ℓ | L U-PVC C-PVC | L PP | L PVDF |
|---|---|---|---|---|---|---|---|---|---|---|---|---|---|---|---|---|---|---|---|---|---|---|---|---|---|---|---|
| 1/2 | 15 | 3.50 | 2.38 | 4 | 0.62 | 5.63 | 5.63 | 5.63 | 0.47 | 3.70 | - | - | - | - | 0.848 | 0.836 | 0.875 | 4.45 | 0.83 | 0.870 | 4.45 | 4.45 | 1/2-14 NPT | 0.59 | 4.02 | 4.02 | 4.02 |
| 3/4 | 20 | 3.88 | 2.75 | 4 | 0.62 | 6.77 | 6.77 | 6.77 | 0.55 | 4.50 | - | - | - | - | 1.058 | 1.046 | 1.000 | 5.08 | 1.03 | 1.000 | 5.08 | 5.08 | 3/4-14 NPT | 0.67 | 4.72 | 4.72 | 4.72 |
| 1 | 25 | 4.25 | 3.12 | 4 | 0.62 | 7.36 | 7.36 | 7.36 | 0.55 | 5.24 | - | - | - | - | 1.325 | 1.310 | 1.125 | 5.75 | 1.30 | 1.130 | 5.75 | 5.75 | 1-11 1/2 NPT | 0.79 | 5.16 | 5.16 | 5.16 |
| 1 1/4 | 32 | 4.62 | 3.50 | 4 | 0.62 | 7.48 | 7.48 | 7.48 | 0.63 | 6.50 | - | - | - | - | 1.670 | 1.655 | 1.250 | 6.46 | 1.65 | 1.250 | 6.46 | 6.46 | 1 1/4-11 1/2 NPT | 0.87 | 5.91 | 5.91 | 5.91 |
| 1 1/2 | 40 | 5.00 | 3.88 | 4 | 0.62 | 8.35 | 8.35 | 8.35 | 0.63 | 6.50 | - | - | - | - | 1.912 | 1.894 | 1.375 | 7.24 | 1.89 | 1.370 | 7.24 | 7.24 | 1 1/2-11 1/2 NPT | 0.98 | 6.42 | 6.42 | 6.42 |
| 2 | 50 | 6.00 | 4.75 | 4 | 0.75 | 9.21 | 9.21 | 9.21 | 0.63 | 7.34 | - | - | - | - | 2.387 | 2.369 | 1.500 | 8.23 | 2.36 | 1.500 | 8.23 | 8.23 | 2-11 1/2 NPT | 1.10 | 7.76 | 7.76 | 7.76 |
| 2 1/2 | 65 | 7.00 | 5.50 | 4 | 0.75 | 10.20 | 10.12 | 10.08 | 0.71 | 10.06 | - | - | - | - | 2.889 | 2.868 | 1.750 | 9.45 | 2.88 | 1.752 | 9.37 | 9.33 | 2 1/2-8 NPT | 1.26 | 8.46 | 8.39 | 8.35 |
| 3 | 80 | 7.50 | 6.00 | 4 | 0.75 | 12.05 | 12.01 | 11.89 | 0.71 | 10.06 | - | - | - | - | 3.516 | 3.492 | 1.875 | 11.14 | 3.48 | 1.874 | 11.10 | 10.98 | 3-8 NPT | 1.38 | 10.43 | 10.39 | 10.28 |
| 4 | 100 | 9.00 | 7.50 | 8 | 0.75 | 14.72 | 14.72 | 14.53 | 0.71 | 12.01 | 4.518 | 4.491 | 2.000 | 13.86 | - | - | - | - | 4.48 | 2.252 | 14.37 | 14.13 | 4-8 NPT | 1.77 | 14.25 | 14.25 | 14.06 |

AUTOMATIC PNEUMATIC TYPE TA DOUBLE ACTING AIR TO OPEN AIR TO CLOSE

# BALL VALVE TYPE 21, 21α

TYPE——A21K, A2AK

CONNECTION / FLANGED, SOCKET, THREADED——JIS, DIN, ANSI SPIGOT——DIN

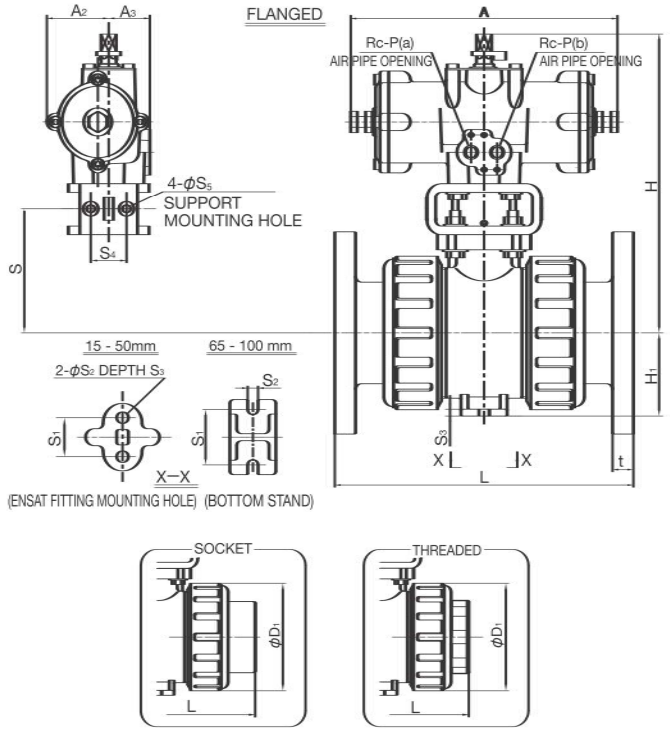


**ACTUATOR SELECTION CHART**

| SIZE | ACTUATOR TYPE |
|---|---|
| 15mm ( 1/2inch) | TA2A-0402D |
| 20mm ( 3/4inch) | |
| 25mm ( 1inch) | |
| 32mm (1 1/4inch) | |
| 40mm (1 1/2inch) | TA2A-050D |
| 50mm ( 2inch) | |
| 65mm (2 1/2inch) | TA2A-063D |
| 80mm ( 3inch) | |
| 100mm ( 4inch) | TA2A-080D |

For detailed specifications, see P.124

■ JIS, DIN (Unit: mm)

| mm | D1 | H | H1 | A | A2 | A3 | S | S1 | S2 | S3 | S4 | S5 | P |
|---|---|---|---|---|---|---|---|---|---|---|---|---|---|
| 15 | 48 | 159.5 | 29 | 110 | 25 | 32 | - | 19 | 7.3 | 11 | - | - | 1/8 |
| 20 | 60 | 166 | 35 | 110 | 25 | 32 | - | 19 | 7.3 | 11 | - | - | 1/8 |
| 25 | 70 | 173 | 39 | 110 | 25 | 32 | - | 19 | 7.3 | 11 | - | - | 1/8 |
| 32 | 82 | 182 | 47 | 110 | 25 | 32 | - | 30 | 9 | 15 | - | - | 1/8 |
| 40 | 100 | 224 | 55 | 210 | 46 | 46 | - | 30 | 9 | 15 | - | - | 1/4 |
| 50 | 126 | 235.5 | 66 | 210 | 46 | 46 | - | 30 | 9 | 15 | - | - | 1/4 |
| 65 | 133 | 268 | 72 | 250 | 57 | 38 | 107.5 | 48 | 9 | 6 | 32 | 7 | 1/4 |
| 80 | 152 | 277 | 85 | 250 | 57 | 38 | 116.5 | 55 | 11 | 7 | 32 | 7 | 1/4 |
| 100 | 210 | 348 | 110 | 292 | 71 | 45 | 151.5 | 65 | 11 | 8 | 42 | 9 | 1/4 |

| mm | JIS | | | | | | | | | DIN | | | | | | | | | | | | |
|---|---|---|---|---|---|---|---|---|---|---|---|---|---|---|---|---|---|---|---|---|---|---|
| | FLANGED JIS5K, JIS10K | | | | SOCKET | | THREADED | | | FLANGED DIN PN10/PN16 | | | | SOCKET | | | THREADED | | | SPIGOT | | |
| | L | | | t | L | | L | | | L | | | t | L | | | L | | | L | | |
| | U-PVC C-PVC | PP | PVDF | | U-PVC C-PVC | PP | U-PVC C-PVC | PP | PVDF | U-PVC C-PVC | PP | PVDF | | U-PVC C-PVC | PP | PVDF | U-PVC C-PVC | PP | PVDF | U-PVC | PP | PVDF |
| 15 | 143 | 143 | 143 | 12 | 109 | 108 | 102 | 100 | 100 | 130 | 130 | 130 | 12 | 109 | 99 | 99 | 102 | 100 | 100 | 124 | 124 | 124 |
| 20 | 172 | 172 | 172 | 14 | 128 | 126 | 120 | 119 | 119 | 150 | 150 | 150 | 14 | 128 | 113 | 113 | 120 | 119 | 119 | 144 | 144 | 144 |
| 25 | 187 | 187 | 187 | 14 | 145 | 141 | 131 | 130 | 130 | 160 | 160 | 160 | 14 | 145 | 123 | 123 | 131 | 130 | 130 | 154 | 154 | 154 |
| 32 | 190 | 190 | 190 | 16 | 162 | - | 150 | 146 | 146 | 180 | 180 | 180 | 16 | 162 | 139 | 139 | 150 | 146 | 146 | 174 | 174 | 174 |
| 40 | 212 | 212 | 212 | 16 | 189 | 171 | 163 | 160 | 160 | 200 | 200 | 200 | 16 | 189 | 149 | 149 | 163 | 160 | 160 | 194 | 194 | 194 |
| 50 | 234 | 234 | 234 | 16 | 220 | 192 | 197 | 194 | 194 | 230 | 230 | 230 | 16 | 220 | 176 | 176 | 197 | 194 | 194 | 224 | 224 | 224 |
| 65 | 261 | 257 | 256 | 18 | 273 | 219 | 215 | 213 | 212 | 290 | 288 | 287 | 18 | 273 | 205 | 204 | 215 | 213 | 212 | 285 | 245 | 244 |
| 80 | 306 | 305 | 302 | 18 | 316 | 257 | 265 | 264 | 261 | 312 | 311 | 308 | 21 | 316 | 252 | 249 | 265 | 264 | 261 | 299 | 296 | 293 |
| 100 | 374 | 374 | 369 | 18 | 419 | 341 | 362 | 362 | 357 | 352 | 352 | 347 | 18 | 419 | 312 | 307 | 340 | 340 | 335 | 358 | 355 | 350 |

■ ANSI (Unit: inch)

| inch | mm | D1 | H | H1 | A | A2 | A3 | S | S1 | S2 | S3 | S4 | S5 | P | ANSI | | | | | | | | | |
|---|---|---|---|---|---|---|---|---|---|---|---|---|---|---|---|---|---|---|---|---|---|---|---|---|
| | | | | | | | | | | | | | | | FLANGED ANSI CLASS150 | | | | SOCKET | | | THREADED | | |
| | | | | | | | | | | | | | | | L | | | | L | | | L | | |
| | | | | | | | | | | | | | | | U-PVC C-PVC | PP | PVDF | t | U-PVC C-PVC | PP | PVDF | U-PVC C-PVC | PP | PVDF |
| 1/2 | 15 | 1.89 | 6.28 | 1.14 | 4.33 | 0.98 | 1.26 | - | 0.75 | 0.29 | 0.43 | - | - | 1/8 | 5.63 | 5.63 | 5.63 | 0.47 | 4.45 | 4.45 | 4.45 | 4.02 | 4.02 | 4.02 |
| 3/4 | 20 | 2.36 | 6.54 | 1.38 | 4.33 | 0.98 | 1.26 | - | 0.75 | 0.29 | 0.43 | - | - | 1/8 | 6.77 | 6.77 | 6.77 | 0.55 | 5.08 | 5.08 | 5.08 | 4.72 | 4.72 | 4.72 |
| 1 | 25 | 2.76 | 6.81 | 1.54 | 4.33 | 0.98 | 1.26 | - | 0.75 | 0.29 | 0.43 | - | - | 1/8 | 7.36 | 7.36 | 7.36 | 0.55 | 5.75 | 5.75 | 5.75 | 5.16 | 5.16 | 5.16 |
| 1 1/4 | 32 | 3.23 | 7.17 | 1.85 | 4.33 | 0.98 | 1.26 | - | 1.18 | 0.35 | 0.59 | - | - | 1/8 | 7.48 | 7.48 | 7.48 | 0.63 | 6.46 | 6.46 | 6.46 | 5.91 | 5.91 | 5.91 |
| 1 1/2 | 40 | 3.94 | 8.82 | 2.17 | 8.27 | 1.81 | 1.81 | - | 1.18 | 0.35 | 0.59 | - | - | 1/4 | 8.35 | 8.35 | 8.35 | 0.63 | 7.24 | 7.24 | 7.24 | 6.42 | 6.42 | 6.42 |
| 2 | 50 | 4.96 | 9.27 | 2.60 | 8.27 | 1.81 | 1.81 | - | 1.18 | 0.35 | 0.59 | - | - | 1/4 | 9.21 | 9.21 | 9.21 | 0.63 | 8.23 | 8.23 | 8.23 | 7.76 | 7.76 | 7.76 |
| 2 1/2 | 65 | 5.24 | 10.55 | 2.83 | 9.84 | 2.24 | 1.50 | 4.23 | 1.89 | 0.35 | 0.24 | 1.26 | 0.28 | 1/4 | 10.20 | 10.12 | 10.08 | 0.71 | 9.45 | 9.37 | 9.33 | 8.46 | 8.39 | 8.35 |
| 3 | 80 | 5.98 | 10.91 | 3.35 | 9.84 | 2.24 | 1.50 | 4.59 | 2.17 | 0.43 | 0.28 | 1.26 | 0.28 | 1/4 | 12.05 | 12.01 | 11.89 | 0.71 | 11.14 | 11.10 | 10.98 | 10.43 | 10.39 | 10.28 |
| 4 | 100 | 8.27 | 13.70 | 4.33 | 11.50 | 2.83 | 1.77 | 5.96 | 2.56 | 0.43 | 0.31 | 1.65 | 0.35 | 1/4 | 14.72 | 14.72 | 14.53 | 0.71 | 13.86 | 14.37 | 14.13 | 14.25 | 14.25 | 14.06 |

AUTOMATIC PNEUMATIC TYPE TA DOUBLE ACTING AIR TO OPEN AIR TO CLOSE

# BALL VALVE TYPE 21, 21α

TYPE——A21K, A2AK

CONNECTION / FLANGED, SOCKET, THREADED——JIS, DIN, ANSI SPIGOT——DIN

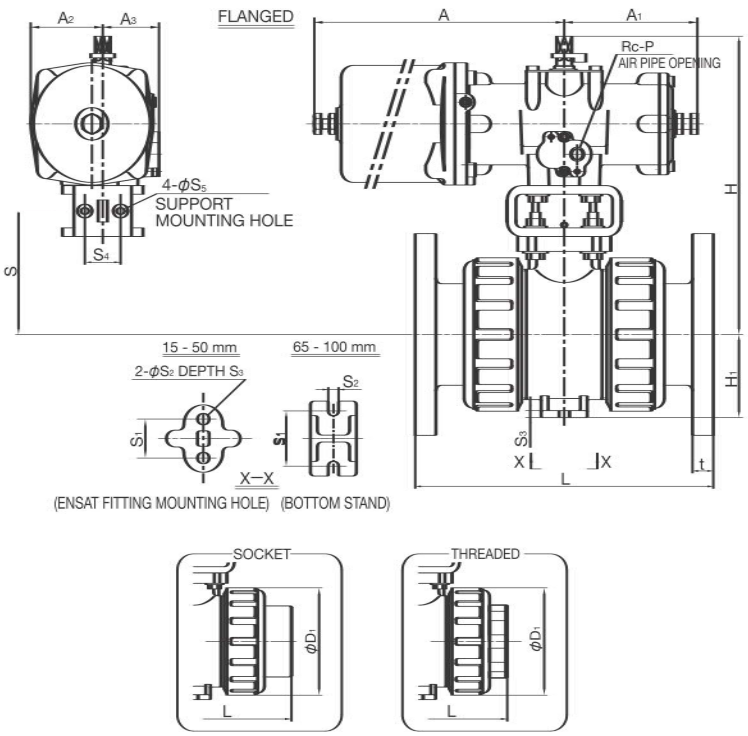


**ACTUATOR SELECTION CHART**

| SIZE | ACTUATOR TYPE |
|---|---|
| 15mm ( 1/2inch) | TA2A-0402R |
| 20mm ( 3/4inch) | |
| 25mm ( 1inch) | |
| 32mm (1 1/4inch) | |
| 40mm (1 1/2inch) | TA2A-050R |
| 50mm ( 2inch) | |
| 65mm (2 1/2inch) | TA2A-063R |
| 80mm ( 3inch) | |
| 100mm ( 4inch) | TA2A-080R |

For detailed specifications, see P.124

■ JIS, DIN (Unit: mm)

| mm | D1 | H | H1 | A | A1 | A2 | A3 | S | S1 | S2 | S3 | S4 | S5 | P |
|---|---|---|---|---|---|---|---|---|---|---|---|---|---|---|
| 15 | 48 | 159.5 | 29 | 194 | 55 | 46 | 46 | - | 19 | 7.3 | 11 | - | - | 1/4 |
| 20 | 60 | 166 | 35 | 194 | 55 | 46 | 46 | - | 19 | 7.3 | 11 | - | - | 1/4 |
| 25 | 70 | 173 | 39 | 194 | 55 | 46 | 46 | - | 19 | 7.3 | 11 | - | - | 1/4 |
| 32 | 82 | 182 | 47 | 194 | 55 | 46 | 46 | - | 30 | 9 | 15 | - | - | 1/4 |
| 40 | 100 | 224 | 55 | 240 | 105 | 53 | 50 | - | 30 | 9 | 15 | - | - | 1/4 |
| 50 | 126 | 235.5 | 66 | 240 | 105 | 53 | 50 | - | 30 | 9 | 15 | - | - | 1/4 |
| 65 | 133 | 268 | 72 | 288 | 125 | 67 | 52 | 107.5 | 48 | 9 | 6 | 32 | 7 | 1/4 |
| 80 | 152 | 277 | 85 | 288 | 125 | 67 | 52 | 116.5 | 55 | 11 | 7 | 32 | 7 | 1/4 |
| 100 | 210 | 348 | 110 | 341 | 146 | 82.5 | 59 | 151.5 | 65 | 11 | 8 | 42 | 9 | 1/4 |

| mm | JIS | | | | | | | | | DIN | | | | | | | | | | | | |
|---|---|---|---|---|---|---|---|---|---|---|---|---|---|---|---|---|---|---|---|---|---|---|
| | FLANGED JIS5K, JIS10K | | | | SOCKET | | THREADED | | | FLANGED DIN PN10/PN16 | | | | SOCKET | | | THREADED | | | SPIGOT | | |
| | L | | | | L | | L | | | L | | | | L | | | L | | | L | | |
| | U-PVC C-PVC | PP | PVDF | t | U-PVC C-PVC | PP | U-PVC C-PVC | PP | PVDF | U-PVC C-PVC | PP | PVDF | t | U-PVC C-PVC | PP | PVDF | U-PVC C-PVC | PP | PVDF | U-PVC | PP | PVDF |
| 10 | - | - | - | - | - | - | - | - | - | 120 | 119 | 119 | 12 | 99 | 96 | 96 | 99 | 98 | 98 | 114 | 114 | 114 |
| 15 | 143 | 143 | 143 | 12 | 109 | 108 | 102 | 100 | 100 | 130 | 130 | 130 | 12 | 102 | 99 | 99 | 102 | 100 | 100 | 124 | 124 | 124 |
| 20 | 172 | 172 | 172 | 14 | 128 | 126 | 120 | 119 | 119 | 150 | 150 | 150 | 14 | 119 | 113 | 113 | 120 | 119 | 119 | 144 | 144 | 144 |
| 25 | 187 | 187 | 187 | 14 | 145 | 141 | 131 | 130 | 130 | 160 | 160 | 160 | 14 | 131 | 123 | 123 | 131 | 130 | 130 | 154 | 154 | 154 |
| 32 | 190 | 190 | 190 | 16 | 162 | - | 150 | 146 | 146 | 180 | 180 | 180 | 16 | 150 | 139 | 139 | 150 | 146 | 146 | 174 | 174 | 174 |
| 40 | 212 | 212 | 212 | 16 | 189 | 171 | 163 | 160 | 160 | 200 | 200 | 200 | 16 | 164 | 149 | 149 | 163 | 160 | 160 | 194 | 194 | 194 |
| 50 | 234 | 234 | 234 | 16 | 220 | 192 | 197 | 194 | 194 | 230 | 230 | 230 | 16 | 197 | 176 | 176 | 197 | 194 | 194 | 224 | 224 | 224 |
| 65 | 261 | 257 | 256 | 18 | 273 | 219 | 215 | 213 | 212 | 290 | 288 | 287 | 18 | 233 | 205 | 204 | 215 | 213 | 212 | 285 | 245 | 244 |
| 80 | 306 | 305 | 302 | 18 | 316 | 257 | 265 | 264 | 261 | 312 | 311 | 308 | 21 | 284 | 252 | 249 | 265 | 264 | 261 | 299 | 296 | 293 |
| 100 | 374 | 374 | 369 | 18 | 419 | 341 | 362 | 362 | 357 | 352 | 352 | 347 | 18 | 351 | 312 | 307 | 340 | 340 | 335 | 358 | 355 | 350 |

■ ANSI (Unit: inch)

| inch | mm | D1 | H | H1 | A | A1 | A2 | A3 | S | S1 | S2 | S3 | S4 | S5 | P | ANSI FLANGED ANSI CLASS150 L U-PVC C-PVC | PP | PVDF | t | SOCKET L U-PVC C-PVC | PP | PVDF | THREADED L U-PVC C-PVC | PP | PVDF |
|---|---|---|---|---|---|---|---|---|---|---|---|---|---|---|---|---|---|---|---|---|---|---|---|---|---|
| 1/2 | 15 | 1.89 | 6.28 | 1.14 | 7.64 | 2.17 | 1.81 | 1.81 | - | 0.75 | 0.29 | 0.43 | - | - | 1/4 | 5.63 | 5.63 | 5.63 | 0.47 | 4.45 | 4.45 | 4.45 | 4.02 | 4.02 | 4.02 |
| 3/4 | 20 | 2.36 | 6.54 | 1.38 | 7.64 | 2.17 | 1.81 | 1.81 | - | 0.75 | 0.29 | 0.43 | - | - | 1/4 | 6.77 | 6.77 | 6.77 | 0.55 | 5.08 | 5.08 | 5.08 | 4.72 | 4.72 | 4.72 |
| 1 | 25 | 2.76 | 6.81 | 1.54 | 7.64 | 2.17 | 1.81 | 1.81 | - | 0.75 | 0.29 | 0.43 | - | - | 1/4 | 7.36 | 7.36 | 7.36 | 0.55 | 5.75 | 5.75 | 5.75 | 5.16 | 5.16 | 5.16 |
| 1 1/4 | 32 | 3.23 | 7.17 | 1.85 | 7.64 | 2.17 | 1.81 | 1.81 | - | 1.18 | 0.35 | 0.59 | - | - | 1/4 | 7.48 | 7.48 | 7.48 | 0.63 | 6.46 | 6.46 | 6.46 | 5.91 | 5.91 | 5.91 |
| 1 1/2 | 40 | 3.94 | 8.82 | 2.17 | 9.45 | 4.13 | 2.09 | 1.97 | - | 1.18 | 0.35 | 0.59 | - | - | 1/4 | 8.35 | 8.35 | 8.35 | 0.63 | 7.24 | 7.24 | 7.24 | 6.42 | 6.42 | 6.42 |
| 2 | 50 | 4.96 | 9.27 | 2.60 | 9.45 | 4.13 | 2.09 | 1.97 | - | 1.18 | 0.35 | 0.59 | - | - | 1/4 | 9.21 | 9.21 | 9.21 | 0.63 | 8.23 | 8.23 | 8.23 | 7.76 | 7.76 | 7.76 |
| 2 1/2 | 65 | 5.24 | 10.55 | 2.83 | 11.34 | 4.92 | 2.64 | 2.05 | 4.23 | 1.89 | 0.35 | 0.24 | 1.26 | 0.28 | 1/4 | 10.20 | 10.12 | 10.08 | 0.71 | 9.45 | 9.37 | 9.33 | 8.46 | 8.39 | 8.35 |
| 3 | 80 | 5.98 | 10.91 | 3.35 | 11.34 | 4.92 | 2.64 | 2.05 | 4.59 | 2.17 | 0.43 | 0.28 | 1.26 | 0.28 | 1/4 | 12.05 | 12.01 | 11.89 | 0.71 | 11.14 | 11.10 | 10.98 | 10.43 | 10.39 | 10.28 |
| 4 | 100 | 8.27 | 13.70 | 4.33 | 13.43 | 5.75 | 3.25 | 2.32 | 5.96 | 2.56 | 0.43 | 0.31 | 1.65 | 0.35 | 1/4 | 14.72 | 14.72 | 14.53 | 0.71 | 13.86 | 14.37 | 14.13 | 14.25 | 14.25 | 14.06 |

AUTOMATIC PNEUMATIC TYPE AA DOUBLE ACTING AIR TO OPEN AIR TO CLOSE

# BALL VALVE TYPE 21, 21α

TYPE——A21A, A2AA

CONNECTION / FLANGED, SOCKET, THREADED——JIS, DIN, ANSI SPIGOT——DIN

FLANGED

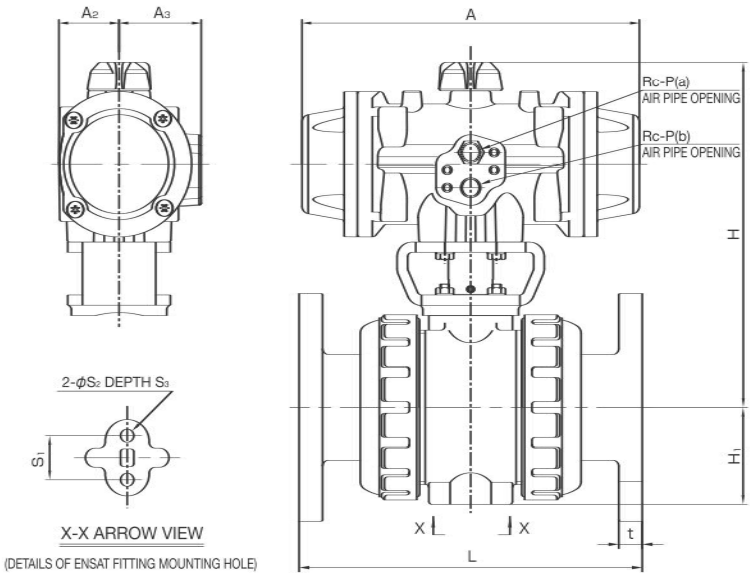


ACTUATOR SELECTION CHART

| SIZE | ACTUATOR TYPE |
|---|---|
| 15mm ( 1/2inch) | PPW |
| 20mm ( 3/4inch) | |
| 25mm ( 1inch) | |
| 32mm (1 1/4inch) | |
| 40mm (1 1/2inch) | PP00 |
| 50mm ( 2inch) | |

For detailed specifications, see P.123

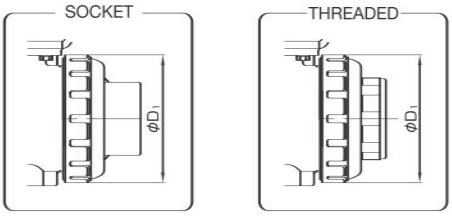


■ JIS, DIN (Unit: mm)

| mm | D1 | H | A | A2 | A3 | H1 | S1 | S2 | S3 | P | JIS FLANGED JIS5K, JIS10K L U-PVC, C-PVC PP, PVDF | JIS FLANGED JIS5K, JIS10K t | JIS SOCKET L U-PVC C-PVC | JIS SOCKET L PP | JIS THREADED L U-PVC C-PVC | JIS THREADED L PP PVDF | DIN FLANGED DIN PN10/PN16 L U-PVC, C-PVC PP, PVDF | DIN FLANGED DIN PN10/PN16 t | DIN SOCKET L U-PVC C-PVC | DIN SOCKET L PP PVDF | DIN THREADED L U-PVC C-PVC | DIN THREADED L PP PVDF | DIN SPIGOT L U-PVC PP, PVDF |
|---|---|---|---|---|---|---|---|---|---|---|---|---|---|---|---|---|---|---|---|---|---|---|---|
| 15 | 48 | 159 | 144 | 28 | 42 | 29 | 19 | 7.3 | 11 | 1/4 | 143 | 12 | 109 | 108 | 102 | 100 | 130 | 12 | 102 | 99 | 102 | 100 | 124 |
| 20 | 60 | 165.5 | 144 | 28 | 42 | 35 | 19 | 7.3 | 11 | 1/4 | 172 | 14 | 128 | 126 | 120 | 119 | 150 | 14 | 119 | 113 | 120 | 119 | 144 |
| 25 | 70 | 172.5 | 144 | 28 | 42 | 39 | 19 | 7.3 | 11 | 1/4 | 187 | 14 | 145 | 141 | 131 | 130 | 160 | 14 | 131 | 123 | 131 | 130 | 154 |
| 32 | 82 | 181.5 | 144 | 28 | 42 | 47 | 30 | 9 | 15 | 1/4 | 190 | 16 | 162 | - | 150 | 146 | 180 | 16 | 150 | 139 | 150 | 146 | 174 |
| 40 | 100 | 203 | 157 | 31 | 48 | 55 | 30 | 9 | 15 | 1/4 | 212 | 16 | 189 | 171 | 163 | 160 | 200 | 16 | 164 | 149 | 163 | 160 | 194 |
| 50 | 126 | 214.5 | 157 | 31 | 48 | 66 | 30 | 9 | 15 | 1/4 | 234 | 16 | 220 | 192 | 197 | 194 | 230 | 16 | 197 | 176 | 197 | 194 | 224 |

■ ANSI (Unit: inch)

| inch | mm | D1 | H | A | A2 | A3 | S | S1 | S2 | S3 | P | ANSI FLANGED ANSI CLASS150 L U-PVC, C-PVC PP, PVDF | ANSI FLANGED ANSI CLASS150 t | ANSI SOCKET L U-PVC, C-PVC PP, PVDF | ANSI THREADED L U-PVC, C-PVC PP, PVDF |
|---|---|---|---|---|---|---|---|---|---|---|---|---|---|---|---|
| 1/2 | 15 | 1.89 | 6.26 | 5.67 | 1.10 | 1.65 | 1.14 | 0.75 | 0.29 | 0.43 | 1/4 | 5.63 | 0.47 | 4.45 | 4.02 |
| 3/4 | 20 | 2.36 | 6.52 | 5.67 | 1.10 | 1.65 | 1.38 | 0.75 | 0.29 | 0.43 | 1/4 | 6.77 | 0.55 | 5.08 | 4.72 |
| 1 | 25 | 2.76 | 6.79 | 5.67 | 1.10 | 1.65 | 1.54 | 0.75 | 0.29 | 0.43 | 1/4 | 7.36 | 0.55 | 5.75 | 5.16 |
| 1 1/4 | 32 | 3.23 | 7.15 | 5.67 | 1.10 | 1.65 | 1.85 | 1.18 | 0.35 | 0.59 | 1/4 | 7.48 | 0.63 | 6.46 | 5.91 |
| 1 1/2 | 40 | 3.94 | 7.99 | 6.18 | 1.22 | 1.89 | 2.17 | 1.18 | 0.35 | 0.59 | 1/4 | 8.35 | 0.63 | 7.24 | 6.42 |
| 2 | 50 | 4.96 | 8.44 | 6.18 | 1.22 | 1.89 | 2.60 | 1.18 | 0.35 | 0.59 | 1/4 | 9.21 | 0.63 | 8.23 | 7.76 |

AUTOMATIC PNEUMATIC TYPE AA DOUBLE ACTING AIR TO OPEN AIR TO CLOSE

# BALL VALVE TYPE 21, 21α

TYPE——A21A, A2AA

CONNECTION / FLANGED, SOCKET, THREADED——JIS, DIN, ANSI SPIGOT——DIN

FLANGED

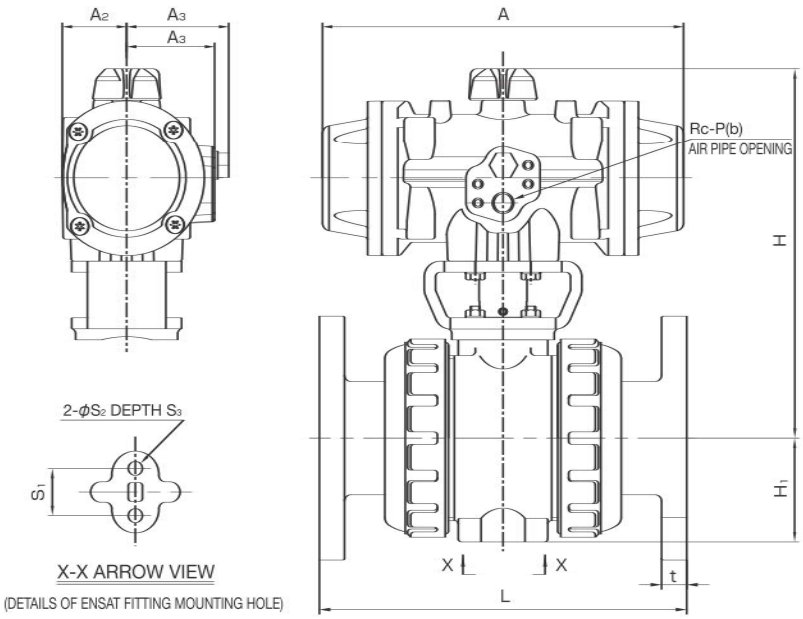


ACTUATOR SELECTION CHART

| SIZE | ACTUATOR TYPE |
|---|---|
| 15mm ( 1/2inch) | PP00S |
| 20mm ( 3/4inch) | |
| 25mm ( 1inch) | |
| 32mm (1 1/4inch) | |
| 40mm (1 1/2inch) | PP10S |
| 50mm ( 2inch) | |

For detailed specifications, see P.123

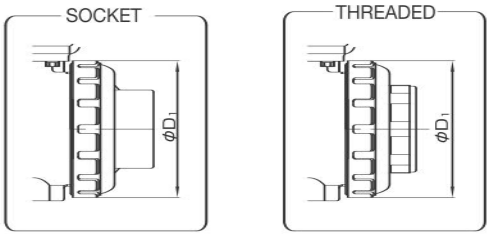


■ JIS, DIN (Unit: mm)

| mm | D1 | H | A | A2 | A3 | A3' | H1 | S1 | S2 | S3 | P | JIS FLANGED JIS5K, JIS10K L U-PVC, C-PVC PP, PVDF | JIS FLANGED JIS5K, JIS10K t | JIS SOCKET L U-PVC C-PVC | JIS SOCKET L PP | JIS THREADED L U-PVC C-PVC | JIS THREADED L PP PVDF | DIN FLANGED DIN PN10/PN16 L U-PVC, C-PVC PP, PVDF | DIN FLANGED DIN PN10/PN16 t | DIN SOCKET L U-PVC C-PVC | DIN SOCKET L PP PVDF | DIN THREADED L U-PVC C-PVC | DIN THREADED L PP PVDF | DIN SPIGOT L U-PVC PP, PVDF |
|---|---|---|---|---|---|---|---|---|---|---|---|---|---|---|---|---|---|---|---|---|---|---|---|---|
| 15 | 48 | 172 | 157 | 31 | 48 | 57 | 29 | 19 | 7.3 | 11 | 1/4 | 143 | 12 | 109 | 108 | 102 | 100 | 130 | 12 | 102 | 99 | 102 | 100 | 124 |
| 20 | 60 | 178.5 | 157 | 31 | 48 | 57 | 35 | 19 | 7.3 | 11 | 1/4 | 172 | 14 | 128 | 126 | 120 | 119 | 150 | 14 | 119 | 113 | 120 | 119 | 144 |
| 25 | 70 | 185.5 | 157 | 31 | 48 | 57 | 39 | 19 | 7.3 | 11 | 1/4 | 187 | 14 | 145 | 141 | 131 | 130 | 160 | 14 | 131 | 123 | 131 | 130 | 154 |
| 32 | 82 | 194.5 | 157 | 31 | 48 | 57 | 47 | 30 | 9 | 15 | 1/4 | 190 | 16 | 162 | - | 150 | 146 | 180 | 16 | 150 | 139 | 150 | 146 | 174 |
| 40 | 100 | 224 | 230 | 41 | 56 | 65 | 55 | 30 | 9 | 15 | 1/4 | 212 | 16 | 189 | 171 | 163 | 160 | 200 | 16 | 164 | 149 | 163 | 160 | 194 |
| 50 | 126 | 235.5 | 230 | 41 | 56 | 65 | 66 | 30 | 9 | 15 | 1/4 | 234 | 16 | 220 | 192 | 197 | 194 | 230 | 16 | 197 | 176 | 197 | 194 | 224 |

■ ANSI (Unit: inch)

| inch | mm | D1 | H | A | A2 | A3 | A3' | H1 | S1 | S2 | S3 | P | ANSI FLANGED ANSI CLASS150 L U-PVC, C-PVC PP, PVDF | ANSI FLANGED ANSI CLASS150 t | ANSI SOCKET L U-PVC, C-PVC PP, PVDF | ANSI THREADED L U-PVC, C-PVC PP, PVDF |
|---|---|---|---|---|---|---|---|---|---|---|---|---|---|---|---|---|
| 1/2 | 15 | 1.89 | 6.77 | 6.18 | 1.22 | 1.89 | 2.24 | 1.14 | 0.75 | 0.29 | 0.43 | 1/4 | 5.63 | 0.47 | 4.45 | 4.02 |
| 3/4 | 20 | 2.36 | 7.03 | 6.18 | 1.22 | 1.89 | 2.24 | 1.38 | 0.75 | 0.29 | 0.43 | 1/4 | 6.77 | 0.55 | 5.08 | 4.72 |
| 1 | 25 | 2.76 | 7.30 | 6.18 | 1.22 | 1.89 | 2.24 | 1.54 | 0.75 | 0.29 | 0.43 | 1/4 | 7.36 | 0.55 | 5.75 | 5.16 |
| 1 1/4 | 32 | 3.23 | 7.66 | 6.18 | 1.22 | 1.89 | 2.24 | 1.85 | 1.18 | 0.35 | 0.59 | 1/4 | 7.48 | 0.63 | 6.46 | 5.91 |
| 1 1/2 | 40 | 3.94 | 8.82 | 9.06 | 1.61 | 2.20 | 2.56 | 2.17 | 1.18 | 0.35 | 0.59 | 1/4 | 8.35 | 0.63 | 7.24 | 6.42 |
| 2 | 50 | 4.96 | 9.27 | 9.06 | 1.61 | 2.20 | 2.56 | 2.60 | 1.18 | 0.35 | 0.59 | 1/4 | 9.21 | 0.63 | 8.23 | 7.76 |

AUTOMATIC PNEUMATIC TYPE AA DOUBLE ACTING AIR TO OPEN AIR TO CLOSE

# BALL VALVE TYPE 21, 21α

TYPE——A21A, A2AA

CONNECTION / FLANGED, SOCKET, THREADED——JIS, DIN, ANSI SPIGOT——DIN

FLANGED

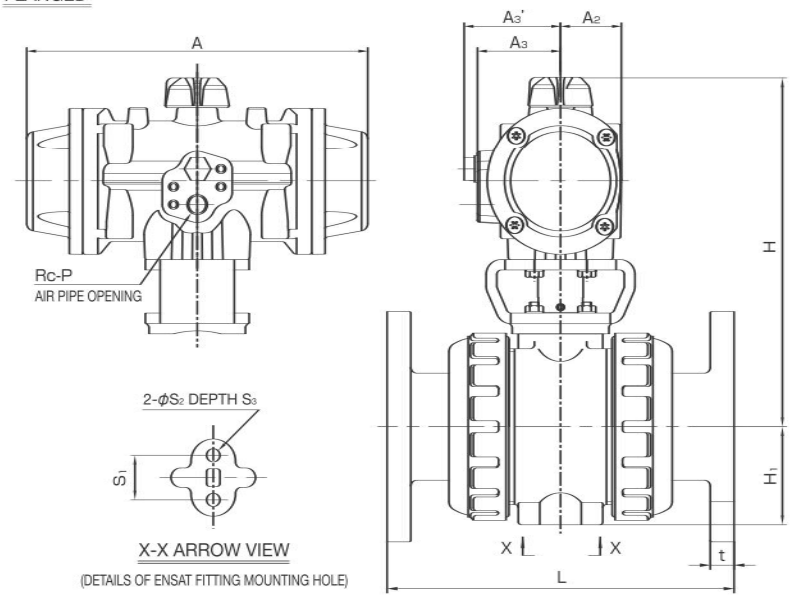


ACTUATOR SELECTION CHART

| SIZE | ACTUATOR TYPE |
|---|---|
| 15mm ( 1/2inch) | PP00S |
| 20mm ( 3/4inch) | |
| 25mm ( 1inch) | |
| 32mm (1 1/4inch) | |
| 40mm (1 1/2inch) | PP10S |
| 50mm ( 2inch) | |

For detailed specifications, see P.123

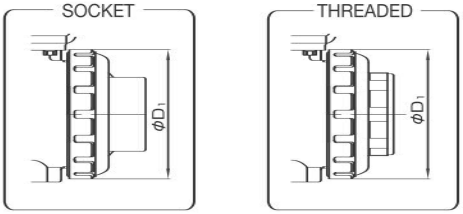


■ JIS, DIN (Unit: mm)

| mm | D1 | H | A | A2 | A3 | A3' | H1 | S1 | S2 | S3 | P | JIS FLANGED JIS5K, JIS10K L U-PVC, C-PVC PP, PVDF | JIS FLANGED JIS5K, JIS10K t | JIS SOCKET L U-PVC C-PVC | JIS SOCKET L PP | JIS THREADED L U-PVC C-PVC | JIS THREADED L PP PVDF | DIN FLANGED DIN PN10/PN16 L U-PVC, C-PVC PP, PVDF | DIN FLANGED DIN PN10/PN16 t | DIN SOCKET L U-PVC C-PVC | DIN SOCKET L PP PVDF | DIN THREADED L U-PVC C-PVC | DIN THREADED L PP PVDF | DIN SPIGOT L U-PVC PP, PVDF |
|---|---|---|---|---|---|---|---|---|---|---|---|---|---|---|---|---|---|---|---|---|---|---|---|
| 15 | 48 | 172 | 157 | 31 | 48 | 57 | 29 | 19 | 7.3 | 11 | 1/4 | 143 | 12 | 109 | 108 | 102 | 100 | 130 | 12 | 102 | 99 | 102 | 100 | 124 |
| 20 | 60 | 178.5 | 157 | 31 | 48 | 57 | 35 | 19 | 7.3 | 11 | 1/4 | 172 | 14 | 128 | 126 | 120 | 119 | 150 | 14 | 119 | 113 | 120 | 119 | 144 |
| 25 | 70 | 185.5 | 157 | 31 | 48 | 57 | 39 | 19 | 7.3 | 11 | 1/4 | 187 | 14 | 145 | 141 | 131 | 130 | 160 | 14 | 131 | 123 | 131 | 130 | 154 |
| 32 | 82 | 194.5 | 157 | 31 | 48 | 57 | 47 | 30 | 9 | 15 | 1/4 | 190 | 16 | 162 | - | 150 | 146 | 180 | 16 | 150 | 139 | 150 | 146 | 174 |
| 40 | 100 | 224 | 230 | 41 | 56 | 65 | 55 | 30 | 9 | 15 | 1/4 | 212 | 16 | 189 | 171 | 163 | 160 | 200 | 16 | 164 | 149 | 163 | 160 | 194 |
| 50 | 126 | 235.5 | 230 | 41 | 56 | 65 | 66 | 30 | 9 | 15 | 1/4 | 234 | 16 | 220 | 192 | 197 | 194 | 230 | 16 | 197 | 176 | 197 | 194 | 224 |

■ ANSI (Unit: inch)

| inch | mm | D1 | H | A | A2 | A3 | A3' | H1 | S1 | S2 | S3 | P | ANSI FLANGED ANSI CLASS150 L U-PVC, C-PVC PP, PVDF | ANSI FLANGED ANSI CLASS150 t | ANSI SOCKET L U-PVC, C-PVC PP, PVDF | ANSI THREADED L U-PVC, C-PVC PP, PVDF |
|---|---|---|---|---|---|---|---|---|---|---|---|---|---|---|---|---|
| 1/2 | 15 | 1.89 | 6.77 | 6.18 | 1.22 | 1.89 | 2.24 | 1.14 | 0.75 | 0.29 | 0.43 | 1/4 | 5.63 | 0.47 | 4.45 | 4.02 |
| 3/4 | 20 | 2.36 | 7.03 | 6.18 | 1.22 | 1.89 | 2.24 | 1.38 | 0.75 | 0.29 | 0.43 | 1/4 | 6.77 | 0.55 | 5.08 | 4.72 |
| 1 | 25 | 2.76 | 7.30 | 6.18 | 1.22 | 1.89 | 2.24 | 1.54 | 0.75 | 0.29 | 0.43 | 1/4 | 7.36 | 0.55 | 5.75 | 5.16 |
| 1 1/4 | 32 | 3.23 | 7.66 | 6.18 | 1.22 | 1.89 | 2.24 | 1.85 | 1.18 | 0.35 | 0.59 | 1/4 | 7.48 | 0.63 | 6.46 | 5.91 |
| 1 1/2 | 40 | 3.94 | 8.82 | 9.06 | 1.61 | 2.20 | 2.56 | 2.17 | 1.18 | 0.35 | 0.59 | 1/4 | 8.35 | 0.63 | 7.24 | 6.42 |
| 2 | 50 | 4.96 | 9.27 | 9.06 | 1.61 | 2.20 | 2.56 | 2.60 | 1.18 | 0.35 | 0.59 | 1/4 | 9.21 | 0.63 | 8.23 | 7.76 |

AUTOMATIC ELECTRIC TYPE T Single-Phase 100V • Single-Phase 200V

# BALL VALVE TYPE 21, 21α

TYPE——A21T, A2AT

CONNECTION / FLANGED, SOCKET, THREADED——JIS, DIN, ANSI SPIGOT——DIN

FLANGED

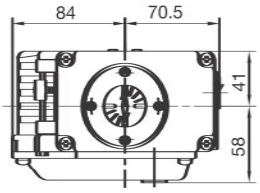


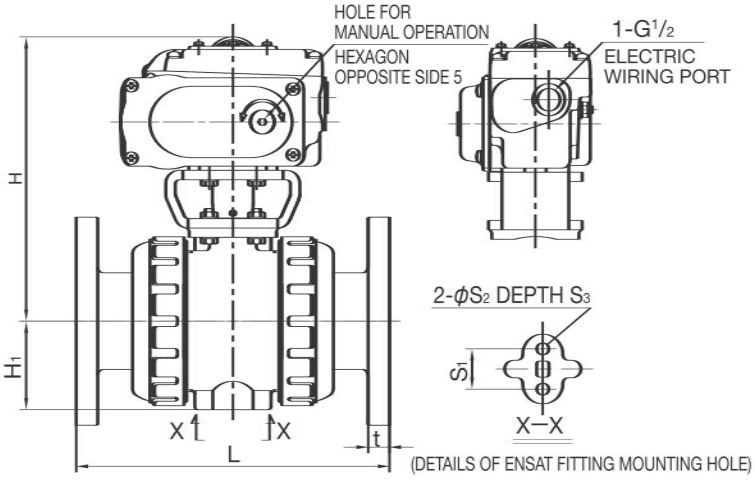


ACTUATOR SELECTION CHART

| SIZE | ACTUATOR TYPE |
|---|---|
| 15mm ( 1/2inch) | T-00 |
| 20mm ( 3/4inch) | |
| 25mm ( 1inch) | |
| 32mm (1 1/4inch) | |
| 40mm (1 1/2inch) | |
| 50mm ( 2inch) | |

For detailed specifications, see P.139

SOCKET

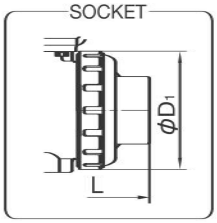


THREADED

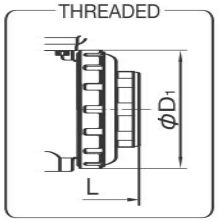


■ JIS, DIN (Unit: mm)

| mm | D1 | H | H1 | S1 | S2 | S3 | JIS FLANGED JIS5K, JIS10K L U-PVC, C-PVC PP, PVDF | JIS FLANGED JIS5K, JIS10K t | JIS SOCKET L U-PVC C-PVC | JIS SOCKET L PP | JIS THREADED L U-PVC C-PVC | JIS THREADED L PP PVDF | DIN FLANGED DIN PN10/PN16 L U-PVC, C-PVC PP, PVDF | DIN FLANGED DIN PN10/PN16 t | DIN SOCKET L U-PVC C-PVC | DIN SOCKET L PP PVDF | DIN THREADED L U-PVC C-PVC | DIN THREADED L PP PVDF | DIN SPIGOT L U-PVC PP, PVDF |
|---|---|---|---|---|---|---|---|---|---|---|---|---|---|---|---|---|---|---|---|
| 15 | 48 | 169.5 | 29 | 19 | 7.3 | 11 | 143 | 12 | 109 | 108 | 102 | 100 | 130 | 12 | 102 | 99 | 102 | 100 | 124 |
| 20 | 60 | 176 | 35 | 19 | 7.3 | 11 | 172 | 14 | 128 | 126 | 120 | 119 | 150 | 14 | 119 | 113 | 120 | 119 | 144 |
| 25 | 70 | 183 | 39 | 19 | 7.3 | 11 | 187 | 14 | 145 | 141 | 131 | 130 | 160 | 14 | 131 | 123 | 131 | 130 | 154 |
| 32 | 82 | 192 | 47 | 30 | 9 | 15 | 190 | 16 | 162 | - | 150 | 146 | 180 | 16 | 150 | 139 | 150 | 146 | 174 |
| 40 | 100 | 200.5 | 55 | 30 | 9 | 15 | 212 | 16 | 189 | 171 | 163 | 160 | 200 | 16 | 164 | 149 | 163 | 160 | 194 |
| 50 | 126 | 212 | 66 | 30 | 9 | 15 | 234 | 16 | 220 | 192 | 197 | 194 | 230 | 16 | 197 | 176 | 197 | 194 | 224 |

■ ANSI (Unit: inch)

| inch | mm | D1 | H | H1 | S1 | S2 | S3 | ANSI FLANGED ANSI CLASS150 L U-PVC, C-PVC PP, PVDF | ANSI FLANGED ANSI CLASS150 t | ANSI SOCKET L U-PVC, C-PVC PP, PVDF | ANSI THREADED L U-PVC, C-PVC PP, PVDF |
|---|---|---|---|---|---|---|---|---|---|---|---|
| 1/2 | 15 | 1.96 | 6.67 | 1.14 | 0.75 | 0.29 | 0.43 | 5.63 | 0.47 | 4.45 | 4.02 |
| 3/4 | 20 | 2.45 | 6.93 | 1.38 | 0.75 | 0.29 | 0.43 | 6.77 | 0.55 | 5.08 | 4.72 |
| 1 | 25 | 2.86 | 7.20 | 1.54 | 0.75 | 0.29 | 0.43 | 7.36 | 0.55 | 5.75 | 5.16 |
| 1 1/4 | 32 | 4.08 | 7.56 | 1.85 | 1.18 | 0.35 | 0.59 | 7.48 | 0.63 | 6.46 | 5.91 |
| 1 1/2 | 40 | 4.08 | 7.89 | 2.17 | 1.18 | 0.35 | 0.59 | 8.35 | 0.63 | 7.24 | 6.42 |
| 2 | 50 | 5.14 | 8.35 | 2.60 | 1.18 | 0.35 | 0.59 | 9.21 | 0.63 | 8.23 | 7.76 |

AUTOMATIC ELECTRIC TYPE T Single-Phase 100V • Single-Phase 200V

# BALL VALVE TYPE 21, 21α

TYPE——A21T

CONNECTION / FLANGED, SOCKET, THREADED——JIS, DIN, ANSI SPIGOT——DIN

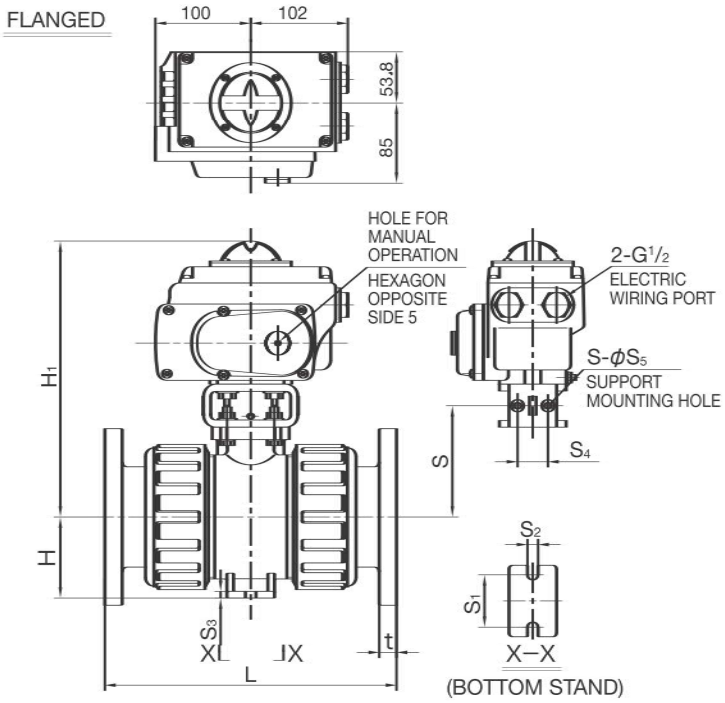


ACTUATOR SELECTION CHART

| SIZE | ACTUATOR TYPE |
|---|---|
| 65mm (2 1/2inch) | T-0 |
| 80mm ( 3inch) | |
| 100mm ( 4inch) | |

For detailed specifications, see P.139

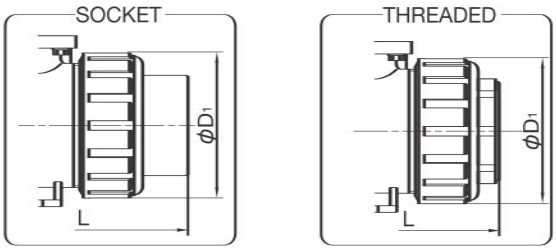


■ JIS, DIN (Unit: mm)

| mm | D1 | H | H1 | S | S1 | S2 | S3 | JIS FLANGED JIS5K, JIS10K L U-PVC C-PVC | PP | PVDF | t | JIS SOCKET L U-PVC C-PVC | PP | JIS THREADED L U-PVC C-PVC | PP | PVDF | DIN FLANGED DIN PN10/PN16 L U-PVC C-PVC | PP | PVDF | t | DIN SOCKET L U-PVC C-PVC | PP | PVDF | DIN THREADED L U-PVC C-PVC | PP | PVDF | DIN SPIGOT L U-PVC | PP | PVDF |
|---|---|---|---|---|---|---|---|---|---|---|---|---|---|---|---|---|---|---|---|---|---|---|---|---|---|---|---|---|---|
| 65 | 133 | 280 | 72 | 107.5 | 48 | 9 | 6 | 261 | 257 | 256 | 18 | 273 | 219 | 215 | 213 | 212 | 290 | 288 | 287 | 18 | 233 | 205 | 204 | 215 | 213 | 212 | 285 | 245 | 244 |
| 80 | 152 | 289 | 85 | 116.5 | 55 | 11 | 7 | 306 | 305 | 302 | 18 | 316 | 257 | 265 | 264 | 261 | 312 | 311 | 308 | 21 | 284 | 252 | 249 | 265 | 264 | 261 | 299 | 296 | 293 |
| 100 | 210 | 327 | 110 | 151.5 | 65 | 11 | 8 | 374 | 374 | 369 | 18 | 419 | 341 | 362 | 362 | 357 | 352 | 352 | 347 | 18 | 351 | 312 | 307 | 340 | 340 | 335 | 358 | 355 | 350 |

■ ANSI (Unit: inch)

| inch | mm | D1 | H | H1 | S | S1 | S2 | S3 | ANSI FLANGED ANSI CLASS150 L U-PVC C-PVC | PP | PVDF | t | ANSI SOCKET L U-PVC C-PVC | PP | PVDF | ANSI THREADED L U-PVC C-PVC | PP | PVDF |
|---|---|---|---|---|---|---|---|---|---|---|---|---|---|---|---|---|---|---|
| 2 1/2 | 65 | 5.43 | 11.02 | 2.83 | 4.23 | 1.89 | 0.35 | 0.24 | 10.20 | 10.12 | 10.08 | 0.71 | 9.45 | 9.37 | 9.33 | 8.46 | 8.39 | 8.35 |
| 3 | 80 | 6.20 | 11.38 | 3.35 | 4.59 | 2.17 | 0.43 | 0.28 | 12.05 | 12.01 | 11.89 | 0.71 | 11.14 | 11.10 | 10.98 | 10.43 | 10.39 | 10.28 |
| 4 | 100 | 8.57 | 12.87 | 4.33 | 5.96 | 2.56 | 0.43 | 0.31 | 14.72 | 14.72 | 14.53 | 0.71 | 13.86 | 14.37 | 14.13 | 14.25 | 14.25 | 14.06 |